6. Remove 4 bolts securing gear case to drive shaft housing.

a - Bolt (4)

Disassembly

Water Pump

NOTE: *If water tube seal remained in drive shaft housing, remove seal from housing and reinstall on water pump cover. Secure seal to cover with Loctite 405.*

1. Remove 4 bolts securing pump cover.

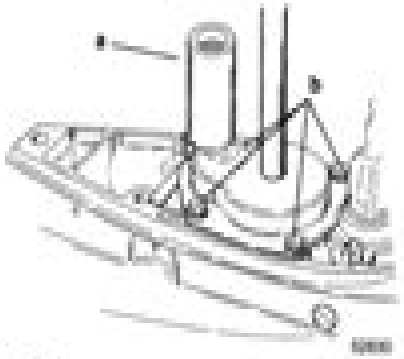

a - Seal
b - Bolt (4)

NOTE: *Replace cover if thickness of steel at discharge slots is 0.060 in. (1.524mm) or less, or if grooves (other than impeller sealing groove) in cover roof are more than 0.030 in. (0.762mm) deep.*

2. Remove cover, washer (above impeller), impeller, key and washer (below impeller).
3. Remove cover gasket, base plate and base gasket.

a - Cover
b - Washer (above impeller)
c - Impeller
d - Key
e - Washer (below impeller)
f - Cover Gasket
g - Face Plate
h - Base Gasket

NOTE: *Replace impeller if:*
- *Impeller blades are cracked, torn or worn.*
- *Impeller is glazed or melted*
- *Rubber portion of impeller is not bonded to impeller hub.*

4. Remove and/or replace exhaust deflector plate if damaged.

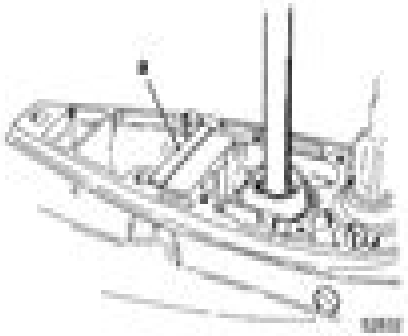

a - Deflector Plate

5. Remove bearing carrier attaching bolts and locking tab washers or flat washers. Discard tab washers.

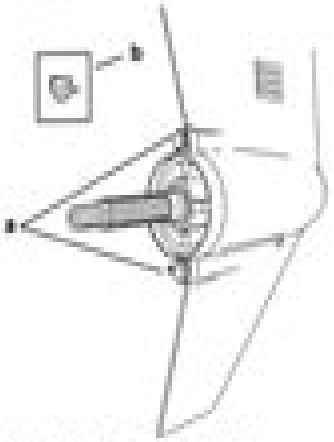

a - Bolts and Tab Washers or Flat Washers
b - Tab Washers Style 2

6. Using Puller (91-27780), remove carrier assembly from gear case.

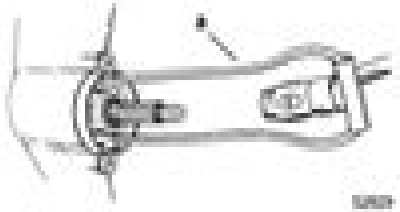

a - Puller (91-27780)

NOTE: *When removing propeller shaft assembly, cam follower may dislodge. Retrieve follower from gear housing.*

7. Remove propeller shaft assembly.

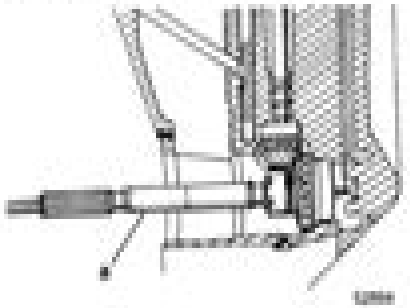

a - Propeller Shaft

Model	Drive Shaft Holding Tool
25, 45/50 (4-Stroke)	91-83180M
Force 40/50	91-825196
30/40, 40/50	91-825196

8. Remove pinion nut and discard.

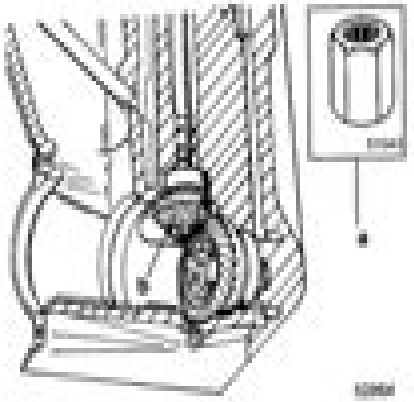

a - Drive Shaft Holding Tool
b - Pinion Gear

9. Remove drive shaft assembly and pinion gear.

50 Elpto Manual

National Electric Light Association.
Prime Movers Committee

50 Elpto Manual:

Diver ,1991 **Electrical and Electronic Systems Tasksheet Manual for NATEF Proficiency** CDX Automotive,2010-02-09 **Workshop Manual Supplementary Instructions for LDO. 1M and LDO. 2M Range :1-ton and 1 1/2-ton Forward-control Vehicles** ,1955 **Lejay Manual** ,1941 **Workshop Manual** ,1972 **User's Manual for the List of Parts** ,1967 **Repair and Maintenance Manual for EMCO and Ironclad Gas Meters** Pittsburgh Equitable Meter Company,1940 Workshop Manual Aktiengesellschaft Daimler-Benz,19?? Electrical Manual ,1967 Shop Manual for Automotive Electricity and Electronics Barry Hollembeak,1994 *Prime time model 93 owner's manual* , *ES-202 Operating Manual* United States. Bureau of Labor Statistics,1985 **User's manual for the m11c version of the elestres code** M. Tayal,1988 Feat : the user's manual Z. Xu,2000 *Auto-Lite Electrical Equipment* Electric Auto-Lite Company,1952 Epi Map 2 Manual Andrew G. Dean,John F. Smith,1996-04-01

Operating code manual National Electric Light Association. Prime Movers Committee,1929 **Plant Biotechnology** S. H. Mantell,1983 Production of commercially useful compounds by plant cell cultures Plant propagation by tissue culture Germplasm maintenance and storage In vitro approaches to the genetic manipulation of plants Genetic engineering of higher plants **Feat user's manual** M. Tayal,1980 *Maintenance & Instructional Manual Lucas Electrical Equipment* Joseph Lucas Ltd,1930

Recognizing the pretentiousness ways to acquire this book **50 Elpto Manual** is additionally useful. You have remained in right site to start getting this info. get the 50 Elpto Manual belong to that we have the funds for here and check out the link.

You could purchase guide 50 Elpto Manual or acquire it as soon as feasible. You could speedily download this 50 Elpto Manual after getting deal. So, in the manner of you require the ebook swiftly, you can straight get it. Its as a result definitely simple and for that reason fats, isnt it? You have to favor to in this expose

https://netdata.businesstraveller.com/data/Resources/fetch.php/Operating_Manual_1975_Century_Raven_Boat.pdf

Table of Contents 50 Elpto Manual

1. Understanding the eBook 50 Elpto Manual
    - The Rise of Digital Reading 50 Elpto Manual
    - Advantages of eBooks Over Traditional Books
2. Identifying 50 Elpto Manual
    - Exploring Different Genres
    - Considering Fiction vs. Non-Fiction
    - Determining Your Reading Goals
3. Choosing the Right eBook Platform
    - Popular eBook Platforms
    - Features to Look for in an 50 Elpto Manual
    - User-Friendly Interface
4. Exploring eBook Recommendations from 50 Elpto Manual
    - Personalized Recommendations
    - 50 Elpto Manual User Reviews and Ratings
    - 50 Elpto Manual and Bestseller Lists
5. Accessing 50 Elpto Manual Free and Paid eBooks
    - 50 Elpto Manual Public Domain eBooks

- 50 Elpto Manual eBook Subscription Services
- 50 Elpto Manual Budget-Friendly Options

6. Navigating 50 Elpto Manual eBook Formats
   - ePub, PDF, MOBI, and More
   - 50 Elpto Manual Compatibility with Devices
   - 50 Elpto Manual Enhanced eBook Features
7. Enhancing Your Reading Experience
   - Adjustable Fonts and Text Sizes of 50 Elpto Manual
   - Highlighting and Note-Taking 50 Elpto Manual
   - Interactive Elements 50 Elpto Manual
8. Staying Engaged with 50 Elpto Manual
   - Joining Online Reading Communities
   - Participating in Virtual Book Clubs
   - Following Authors and Publishers 50 Elpto Manual
9. Balancing eBooks and Physical Books 50 Elpto Manual
   - Benefits of a Digital Library
   - Creating a Diverse Reading Collection 50 Elpto Manual
10. Overcoming Reading Challenges
    - Dealing with Digital Eye Strain
    - Minimizing Distractions
    - Managing Screen Time
11. Cultivating a Reading Routine 50 Elpto Manual
    - Setting Reading Goals 50 Elpto Manual
    - Carving Out Dedicated Reading Time
12. Sourcing Reliable Information of 50 Elpto Manual
    - Fact-Checking eBook Content of 50 Elpto Manual
    - Distinguishing Credible Sources
13. Promoting Lifelong Learning
    - Utilizing eBooks for Skill Development
    - Exploring Educational eBooks

14. Embracing eBook Trends
    - Integration of Multimedia Elements
    - Interactive and Gamified eBooks

50 Elpto Manual Introduction

Free PDF Books and Manuals for Download: Unlocking Knowledge at Your Fingertips In todays fast-paced digital age, obtaining valuable knowledge has become easier than ever. Thanks to the internet, a vast array of books and manuals are now available for free download in PDF format. Whether you are a student, professional, or simply an avid reader, this treasure trove of downloadable resources offers a wealth of information, conveniently accessible anytime, anywhere. The advent of online libraries and platforms dedicated to sharing knowledge has revolutionized the way we consume information. No longer confined to physical libraries or bookstores, readers can now access an extensive collection of digital books and manuals with just a few clicks. These resources, available in PDF, Microsoft Word, and PowerPoint formats, cater to a wide range of interests, including literature, technology, science, history, and much more. One notable platform where you can explore and download free 50 Elpto Manual PDF books and manuals is the internets largest free library. Hosted online, this catalog compiles a vast assortment of documents, making it a veritable goldmine of knowledge. With its easy-to-use website interface and customizable PDF generator, this platform offers a user-friendly experience, allowing individuals to effortlessly navigate and access the information they seek. The availability of free PDF books and manuals on this platform demonstrates its commitment to democratizing education and empowering individuals with the tools needed to succeed in their chosen fields. It allows anyone, regardless of their background or financial limitations, to expand their horizons and gain insights from experts in various disciplines. One of the most significant advantages of downloading PDF books and manuals lies in their portability. Unlike physical copies, digital books can be stored and carried on a single device, such as a tablet or smartphone, saving valuable space and weight. This convenience makes it possible for readers to have their entire library at their fingertips, whether they are commuting, traveling, or simply enjoying a lazy afternoon at home. Additionally, digital files are easily searchable, enabling readers to locate specific information within seconds. With a few keystrokes, users can search for keywords, topics, or phrases, making research and finding relevant information a breeze. This efficiency saves time and effort, streamlining the learning process and allowing individuals to focus on extracting the information they need. Furthermore, the availability of free PDF books and manuals fosters a culture of continuous learning. By removing financial barriers, more people can access educational resources and pursue lifelong learning, contributing to personal growth and professional development. This democratization of knowledge promotes intellectual curiosity and empowers individuals to become lifelong learners, promoting progress and innovation in various fields. It is worth noting that while accessing free 50

Elpto Manual PDF books and manuals is convenient and cost-effective, it is vital to respect copyright laws and intellectual property rights. Platforms offering free downloads often operate within legal boundaries, ensuring that the materials they provide are either in the public domain or authorized for distribution. By adhering to copyright laws, users can enjoy the benefits of free access to knowledge while supporting the authors and publishers who make these resources available. In conclusion, the availability of 50 Elpto Manual free PDF books and manuals for download has revolutionized the way we access and consume knowledge. With just a few clicks, individuals can explore a vast collection of resources across different disciplines, all free of charge. This accessibility empowers individuals to become lifelong learners, contributing to personal growth, professional development, and the advancement of society as a whole. So why not unlock a world of knowledge today? Start exploring the vast sea of free PDF books and manuals waiting to be discovered right at your fingertips.

FAQs About 50 Elpto Manual Books

How do I know which eBook platform is the best for me? Finding the best eBook platform depends on your reading preferences and device compatibility. Research different platforms, read user reviews, and explore their features before making a choice. Are free eBooks of good quality? Yes, many reputable platforms offer high-quality free eBooks, including classics and public domain works. However, make sure to verify the source to ensure the eBook credibility. Can I read eBooks without an eReader? Absolutely! Most eBook platforms offer web-based readers or mobile apps that allow you to read eBooks on your computer, tablet, or smartphone. How do I avoid digital eye strain while reading eBooks? To prevent digital eye strain, take regular breaks, adjust the font size and background color, and ensure proper lighting while reading eBooks. What the advantage of interactive eBooks? Interactive eBooks incorporate multimedia elements, quizzes, and activities, enhancing the reader engagement and providing a more immersive learning experience. 50 Elpto Manual is one of the best book in our library for free trial. We provide copy of 50 Elpto Manual in digital format, so the resources that you find are reliable. There are also many Ebooks of related with 50 Elpto Manual. Where to download 50 Elpto Manual online for free? Are you looking for 50 Elpto Manual PDF? This is definitely going to save you time and cash in something you should think about.

Find 50 Elpto Manual :

~~operating manual 1975 century raven boat~~

accounting practice set luxurious spa solutions

business studies specimen papers for isc 24
naughty and nice taboo erotica
value of 2003 ford expedition
2006 porsche carrera owners manual
quizlet ap biology chapter 17
naughts and crosses study guide questions
the russians ultimatum mills boon modern
~~manual repair bobcat 751~~
american odyssey edition chapter notes
nature scope important of consumer behaviour
a faithful elf
aquarius dialysis manual
2013 mathematics vision project answers module 9

50 Elpto Manual :

Principles Of Radiographic Imaging 6th Edition Textbook ... Access Principles of Radiographic Imaging 6th Edition solutions now. Our solutions are written by Chegg experts so you can be assured of the highest ... Chapters 1 Radiographic Principles Workbook Questions What is the image receptor in direct digital radiography? A. Phosphor imaging plate. B. Intensifying screen and film. C. Solid -state detector. D.computer ... Chapter 12 Principles of Radiographic Imaging Review ... Study with Quizlet and memorize flashcards containing terms like For radiographic procedures, scatter radiation is primarily the result of: photoelectric ... Test Bank for Principles of Radiographic Imaging 6th ... Apr 4, 2022 — Test Bank for Principles of Radiographic Imaging 6th Edition by Carlton. Course; NURSING 1210. Institution; University Of California - Los ... Principles Of Radiographic Imaging: An Art And A Science Textbook solutions for Principles Of Radiographic Imaging: An Art And A Science… 6th Edition Richard R. Carlton and others in this series. Student Workbook for Carlton/Adler/Balac's Principles of ... Student Workbook for Carlton/Adler/Balac's Principles of Radiographic Imaging: An Art and A Science | 6th Edition ; Access the eBook $67.95 ; ISBN · 9780357771525. Chapter 20 Solutions - Principles of Radiographic Imaging Access Principles of Radiographic Imaging 6th Edition Chapter 20 solutions now. Our solutions are written by Chegg experts so you can be assured of the ... Test Bank For Principles of Radiographic Imaging: An Art ... Jul 18, 2023 — Test Bank For Principles of Radiographic Imaging: An Art and a Science - 6th - Test Bank For Principles of Radiographic Imaging 6th ... five. ANSWER: b. POINTS: 1. DIFFICULTY: Medium QUESTION TYPE: Multiple Choice HAS VARIABLES: False DATE CREATED:

2/4 ... Student Workbook for Carlton/Adler/Balac's Principles ... The student workbook is designed to help you retain key chapter content. Chapter objective questions, key terms and definitions, and a variety of question ... Convince Them in 90 Seconds or Less: Make Instant ... But he doesn't stop there. This book shows how to turn those instant connections into long-lasting, productive business relationships."—Marty Edelston, ... Convince Them in 90 Seconds or Less: Make Instant ... Convince Them in 90 Seconds or Less: Make Instant Connections That Pay Off in Business and in Life · Paperback · $13.95. Convince Them in 90 Seconds or Less This book teaches you about the snap judgments that are made in those first few instants and how you can make them work to your advantage. Once you're past ... How to Persuade People in 90 Seconds or Less May 27, 2010 — "Just adjust to useful attitudes, as opposed to useless attitudes," he says. "Useful might be resourceful or welcoming, enthusiastic. Useless ... Convince Them in 90 Seconds Mar 11, 2021 — There are a number of rules to learn in order to establish a fruitful relationship. They are to make the other person talk, stay focused on what ... Book review: Convince them in 90 seconds Aug 31, 2010 — Successful leaders share three really useful attitudes. They're enthusiastic. They're curious. And they embrace humility, with a public persona ... Convince Them in 90 Seconds or Less Quotes It's much easier to be convincing if you care about your topic. Figure out what's important to you about your message and speak from the heart. Convince Them in 90 Seconds or Less: Make Instant ... May 26, 2010 — Convince Them in 90 Seconds or Less: Make Instant Connections That Pay Off in Business and in Life (Paperback). By Nicholas Boothman. $13.95. Convince Them in 90 Seconds or Less: Make Instant ... May 26, 2010 — Whether you're selling, negotiating, interviewing, networking, or leading a team, success depends on convincing other people - and ... CS Customer Service SAP ERP Central Component As of SAP ECC 6.0 (SAP_APPL 600), the structure of the Implementation Guide (IMG) for the component Plant Maintenance and Customer Service has changed. To ... Customer Service Module Customer Service Module provides your customer service agents (CSAs) with easy and fast access to the information needed to understand and quickly resolve ... Service Management in SAP with Customer ... Sep 30, 2019 — Customer Service Module with in SAP Core ERP enables to manage a wide range of service scenarios starting from pre-sales, sales and post-sales. CS User Manual | PDF | Computing | Software CS User Manual - Free download as PDF File (.pdf), Text File (.txt) or read online for free. CUSTOMER SERVICE MODULE SAP ECC 6. USER MANUAL SAP CS Module ... About Customer Service Module Customer Service Module provides your customer service agents (CSAs) with easy and fast access to the information needed to understand and quickly resolve ... Customer Service (CS) Apr 2, 2001 — The following documentation displays the organization of the Customer Service in IDES as well as the embedding of this service organization into ... SAP Customer Service | PDF | String (Computer Science) SAP Customer Service - Free download as Word Doc (.doc), PDF File (.pdf), Text File (.txt) or read online for free. Basic SAP CS Configuration Document. SAP Customer Service (CS/SM) In this exciting introduction to the SAP Customer service module you will learn all about how service management works in SAP as we cover the four primary real ... Customer Service (CS) □

summarize the master data which is most important for the CS module. □ explain standard processes of the Customer Service. Page 5. © 2019 SAP SE / SAP ... SAP Customer Service Overview - YouTube